WORLD CLASS PERFORMANCE FABCO-AIR PNEUMATIC PRODUCTS

FKHT Series
Angular, Toggle Type Grippers

Prices effective September 1, 2011

Features

1. Grippers are ideal for heavy workpieces.
2. A toggle mechanism holds workpiece securely even when pressure drops.
3. Magnetic piston is standard feature.
4. Adding optional sensors enables "open" and "close" position sensing.
5. Gripper body is hardcoated aluminum ensuring abrasion and corrosion resistance.
6. No extra lubrication required.
7. Tapped mounting holes on 5 surfaces.

Specifications

100 PSI MAX.

Model	FKHT			
Action	Double acting			
Bore (mm)	ø32	ø40	ø50	ø63
Media	Compressed air			
Min.operating pressure	15 psi			
Max.operating pressure	0.7 MPa (7 kgf/cm2) 100 psi			
Ambient & media temperature	5°C(41°F) ~ +60°C(140°F) Use filtered dry air			
Lubrication	None required or use ISO VG32			
Opening	-3°to 28°	-2°to 27°	-2°to 23°	-2°to 23°
*Effective grip force (lbf)	22 (L=100mm)	44 (L=120mm)	67 (L=150mm)	89 (L=180mm)
Weight kg (lb)	0.8(1.76)	1.09(2.4)	1.93(4.2)	2.8(6.2)

**Note: 58psi with 0° jaw angle and 'L' = gripping point. See page 2.*

How to Order

FKHT – 32

Series	Bore	Price
Toggle Type	ø32	$265.70
	ø40	286.40
	ø50	329.35
	ø63	365.95

Type 9C49 Sensors are used with FKHT toggle type grippers. Please order sensors and female cordsets separately from the selection guides below.

Sensors

9C49 Sensors

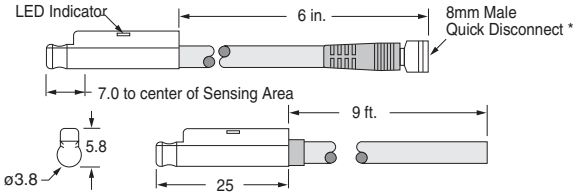

9C49 style sensors feature surge suppression, polarity protection, LED indicator, and extremely fast switching speeds. They slide into mating 4mm keyhole slots on either side of the cylinder housing and are easily positioned and locked in place with a set screw. They are offered in two styles: a quick connect style with a six inch pigtail and male connector, or a pre-wired style with a 9 foot lead.

Cordsets

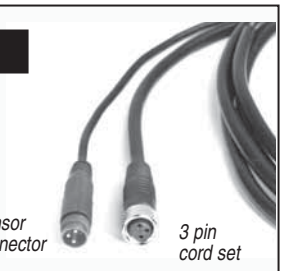

Female Cord Sets	Part No.	Price
1 Meter	CFC-1M	$15.05
2 Meters	CFC-2M	16.85
5 Meters	CFC-5M	21.30

Sensor Selection Guide – Electrical Characteristics							Part Numbers and Prices			
Sensor Type	Function	Switching Voltage	Switching Current	Switching Power	Switching Speed	Voltage Drop	Prewired 9 ft.		Quick connect	
							Part No.	Price	Part No.	Price
Electronic LED and Sourcing	PNP Normally Open	6-30 VDC	0.2 Amp max.	6 Watts max.	1.5μs operate 0.5μs release	1.5 Volts	9C49-000-031	$28.65	9C49-000-331	$33.25
Electronic LED and SInking	NPN Normally Open	6-30 VDC	0.2 Amp max.	6 Watts max.	1.5μs operate 0.5μs release	1.5 Volts	9C49-000-032	28.65	9C49-000-332	33.25

All sensors feature surge supression, polarity protection, LED indicator, and extremely fast switching speeds.

Fabco-Air, Inc. ■ 3716 N.E. 49th Avenue ■ Gainesville, FL 32609-1699
■ Telephone (352) 373-3578 ■ Fax (352) 375-8024 ■ E-Mail service@fabco-air.com
■ Web Site http://www.fabco-air.com

Specifications and prices subject to change without notice or incurring obligation.

Effective Gripping Force on external workpiece surfaces

- Workpiece gripping point should be within the range indicated in the graph

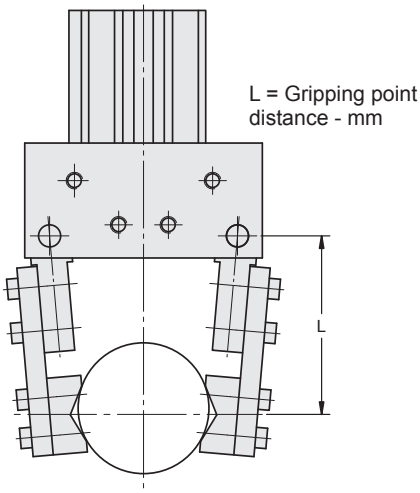

- **Indication of effective gripping force**
  The effective gripping force shown in the graphs is expressed as F, which is the thrust of one finger, when both fingers and attachments are in full contact with the workpiece as shown in the figure below.

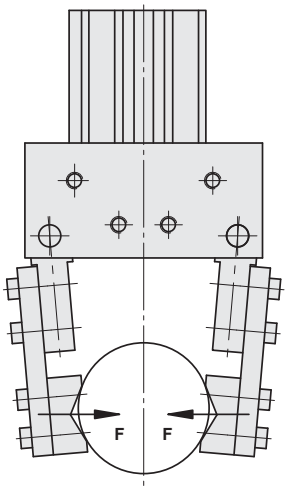

⚠ Warning

If a workpiece is to be gripped by using the toggle, make sure to periodically check that the workpiece has not shifted during the acceleration of the movement. If the workpiece is not gripped in a stable manner, it could shift or drop and create a dangerous situation.If the workpiece is not gripped in a stable
manner, use shims on the attachment to adjust the grip. To verify the gripping condition, or to make any adjustments, make sure to do so in an area where
the gripper or the workpiece will not fall.

The toggle mechanism works most effectively, and can hold a workpiece even if pressure drops, when the gripper fingers are closed to less than 0°.

FKHT-32

L=100mm

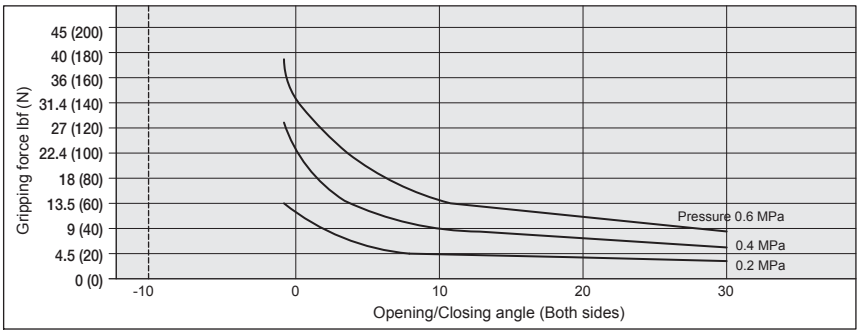

FKHT-40

L=120mm

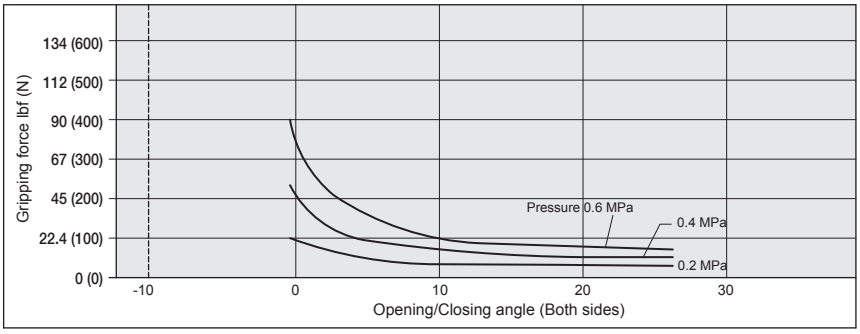

FKHT-50

L=150mm

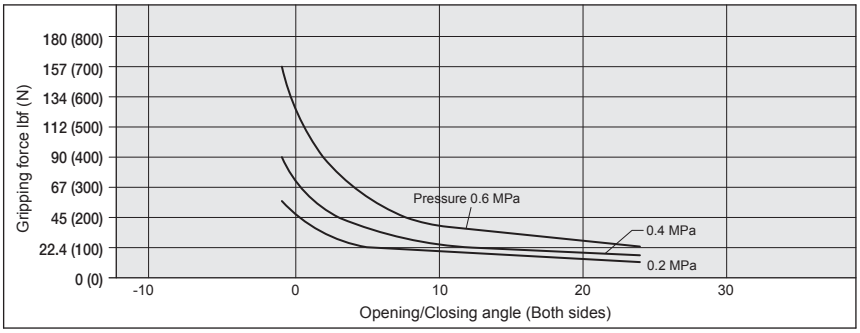

FKHT-63

L=180mm

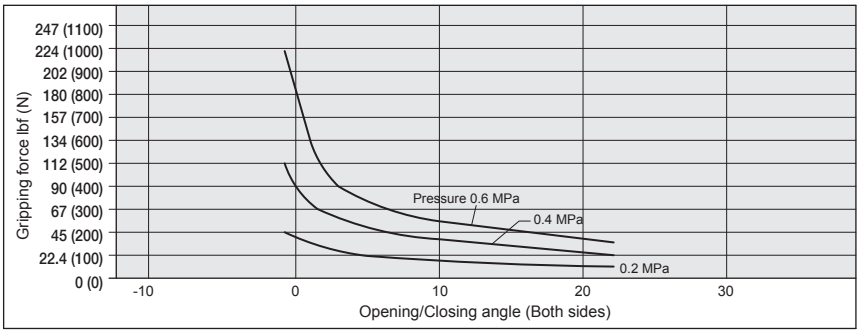

Conversions:
lbf = N x 0.224 0.4 MPa = 58 psi
0.2 MPa = 29 psi 0.6 MPa = 87 psi

FKHT Series
Gripper Dimensions (mm)

FKHT-32

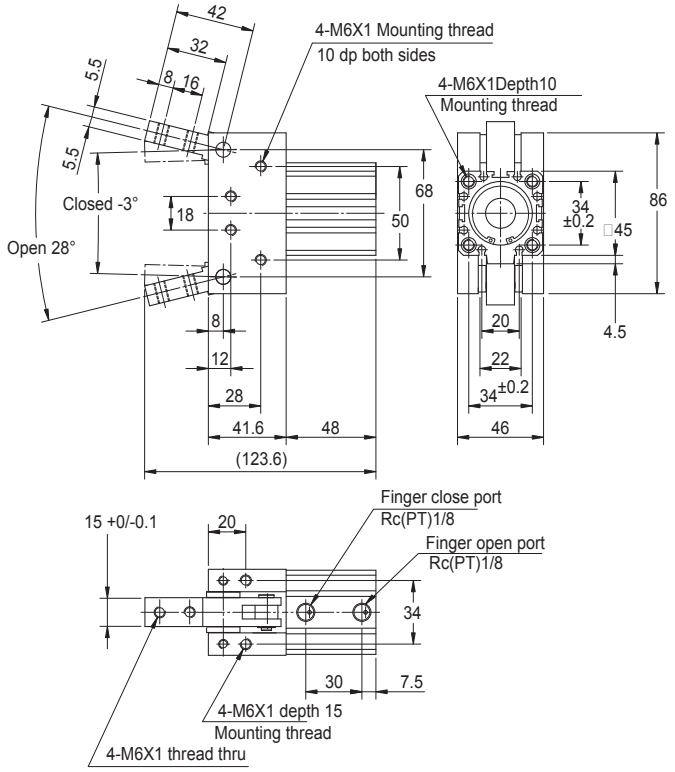

FKHT-40

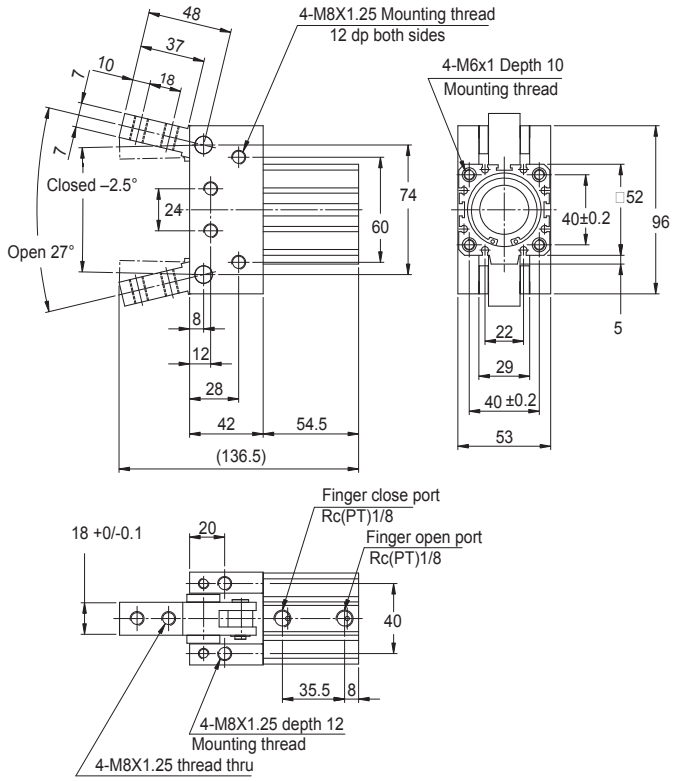

FKHT-50

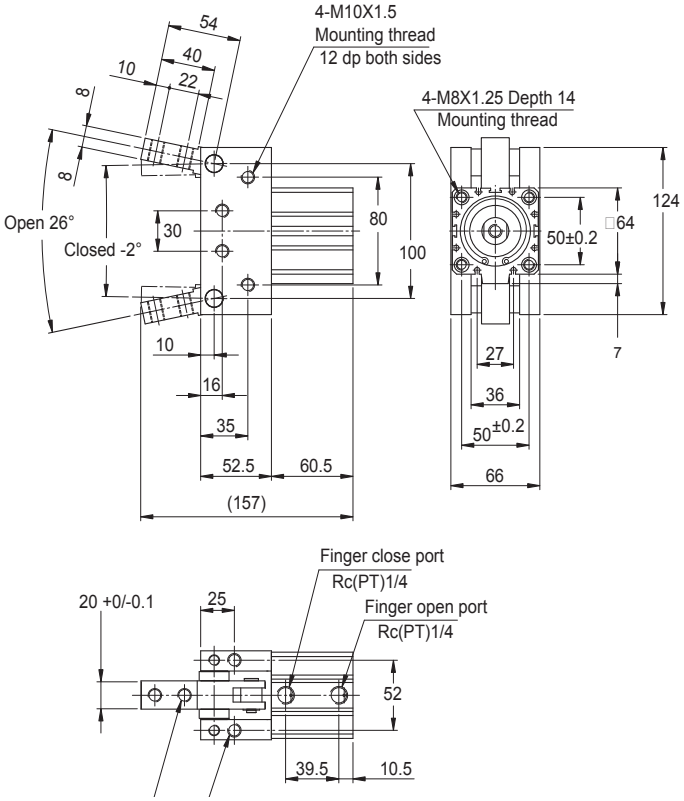

FKHT-63

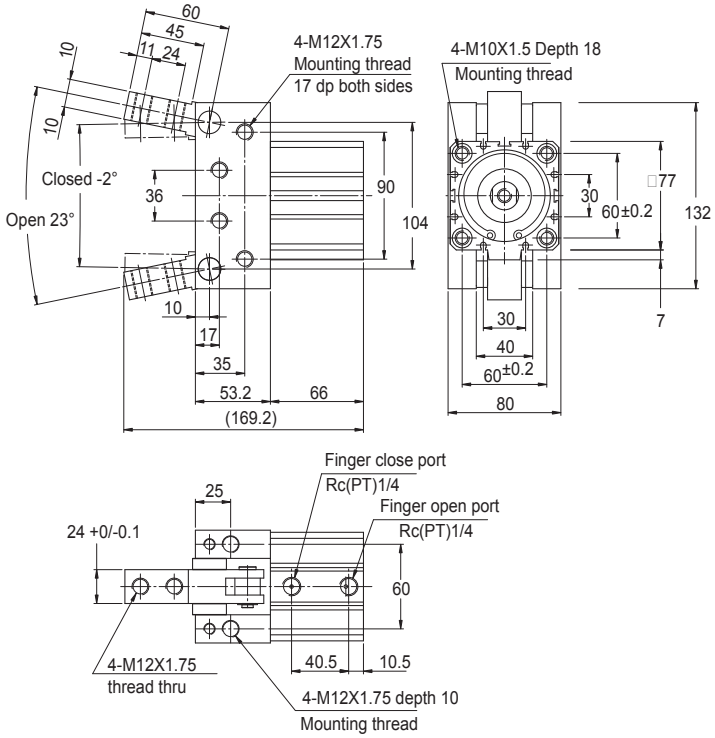

Specifications and prices subject to change without notice or incurring obligation.

Sensor Installation

NEW PRODUCT

Detection Example	1. Confirmation of fingers in reset position	2. Confirmation of workpiece held	3. Confirmation of workpiece released
Position to be detected for external gripping	Position of fingers fully open 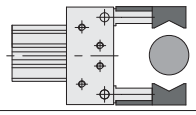	Position when gripping workpiece 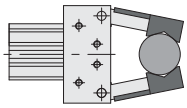	Position of fingers fully closed 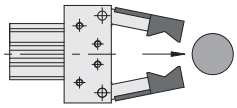
Operation of sensor	Switch turned on when fingers return. (LED ON)	Switch turned on when gripping a workpiece. (LED ON)	When a workpiece is held (Normal operation): Switch to turn OFF (LED not illuminating) When workpiece is not held (Abnormal operation): Switch to turn ON (LED ON)
Detection Combination: One sensor	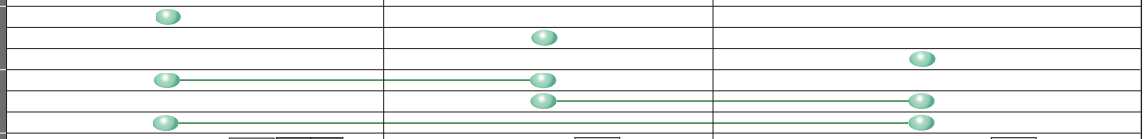		
Detection Combination: Two sensors			
How to determine sensor installation position	**Step 1** Fully open the fingers 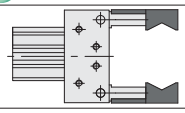	**Step 1** Position fingers for gripping a workpiece 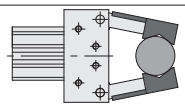	**Step 1** Fully close the fingers 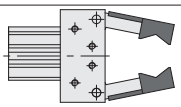
At no or low pressure, connect the sensor to a power supply and follow the directions.	**Step 2** Insert the sensor into the mounting slot in the direction shown in the drawing. 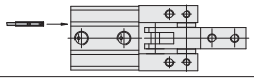		
	Step 3 Slide the sensor further in the direction of the arrow until LED illuminates 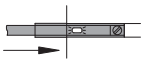 **Step 4** Slide the sensor further until LED goes out **Step 5** Move the sensor in the opposite direction and fasten it at a position 0.3 to 0.5 mm beyond the point where indicator light illuminates. Position where LED turns ON 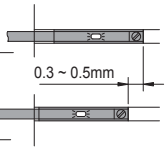 Position to be secured	**Step 3** Slide the sensor in the direction of the arrow until LED illuminates. Fasten it in a position 0.30 to 0.5 mm in the direction of the arrow beyond the position where the LED illuminates. 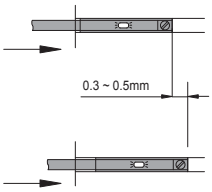	Note: It is recommended that gripping a workpiece be performed close to the center of the finger stroke. Note 2) When holding a workpiece close to the end of open/close finger stroke, detecting performance of the combinations listed above may be limited, depending on sensor hysteresis, etc.

Recent new product catalogs from *FABCO-AIR*

FKHC Angular Motion High Force Grippers Catalog # FKHC-10

FKHL Series Wide Parallel Jaw Grippers Catalog # FKHL-10

FKHQ Narrow Opening Parallel Grippers Catalog # FKHQ-10

FKHZ Wide Opening Parallel Grippers Catalog # FKHZ-10

Pneumatic Grippers Angular Motion Catalog # FKA-09

Pneumatic Grippers, Parallel Jaw & Angular Motion - Catalog # GR-8

Linear Slides 6 Families Catalog # LS-03

Pneumatic Rotary Actuators Catalog # FRA.C-09

5-3-10

Fabco-Air, Inc. ■ 3716 N.E. 49th Avenue ■ Gainesville, FL 32609-1699
■ Telephone (352) 373-3578 ■ Fax (352) 375-8024
■ E-Mail service@fabco-air.com
■ Web Site http://www.fabco-air.com